Brand	hansgrohe
Art. Name	**Pulsify S** Showerpipe 260 2jet EcoSmart with ShowerTablet Select 400
Art. Nr.	24241140
Surface	Brushed Bronze

Product picture



Drawing

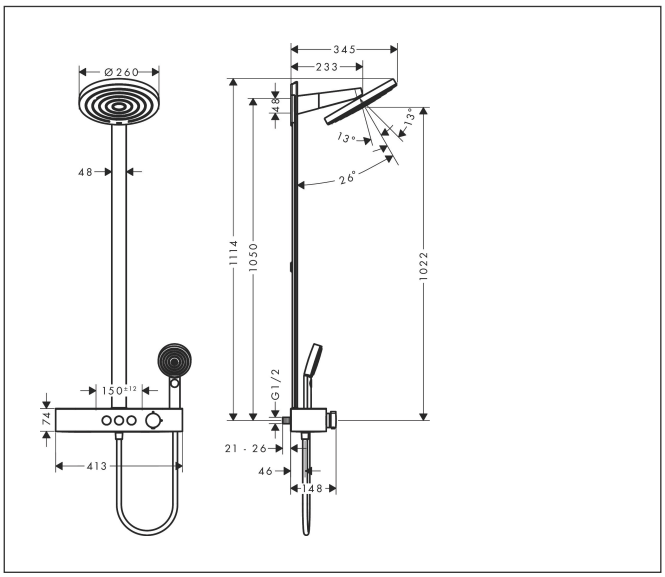

Features

- consists of: overhead shower, hand shower, shower thermostat, shower bar, shower hose
- overhead shower Pulsify 260 2jet
- shower head size overhead shower: 260 mm
- ball-joint: overhead shower inclinable by 13-39°
- spray disc surface: graphite
- QuickClean: Limescale deposits can simply be rubbed off with your finger
- Fast Drain empties the overhead shower from an angle of 10°
- removable shower head
- spray type overhead shower: PowderRain, Intense PowderRain
- flow rate IntenseRain spray at 3 bar: 7,5 l/min
- flow rate PowderRain spray at 3 bar: 7,5 l/min
- spray type hand shower: PowderRain, IntenseRain, Massage spray
- maximum flow rate of hand shower at 3 bar: 7,5 l/min
- function from: 7 l/min
- maximum flow rate for Showerpipe at 3 bar: 7,5 l/min
- minimum flow pressure: 1,7 bar
- max. operating pressure: 10 bar
- shelf made of plastic
- surface shelf: graphite
- shower arm length overhead shower: 233 mm
- CoolContact thermostat: prevents the housing from heating up, making showering even safer

Technology

Safety Stop 40°C | Thermostat °C | Water Flow Control | Fast Drain | Cool Contact

Select SELECT | XXL Performance ←XXL→ | EcoSmart | EcoRight | Quick Clean

Spray Types

Massage | Intense Rain | Intense Powder Rain | Powder Rain

Brand	hansgrohe
Art. Name	**Pulsify S** Showerpipe 260 2jet EcoSmart with ShowerTablet Select 400
Art. Nr.	24241140
Surface	Brushed Bronze

Flow chart

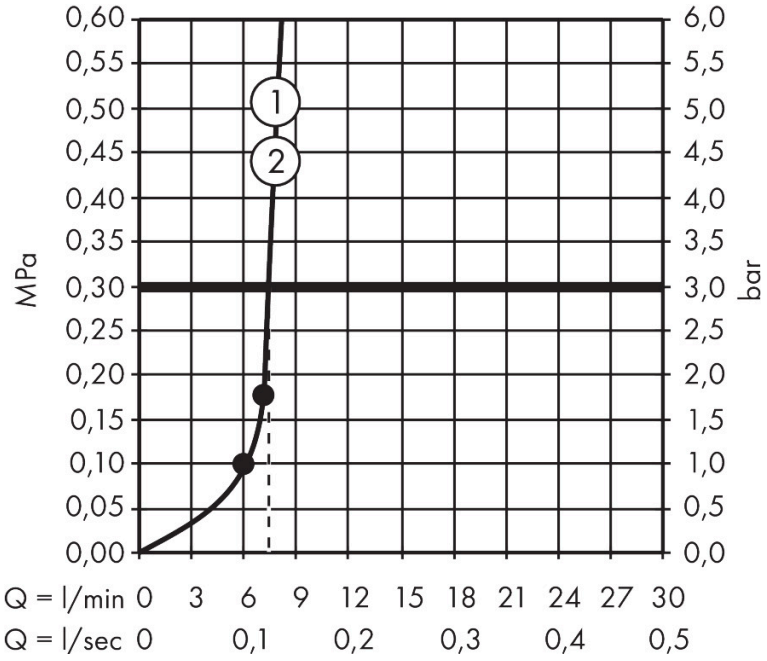

1 Hand shower
2 Overhead shower

Brand	hansgrohe
Art. Name	**Pulsify S** Showerpipe 260 2jet EcoSmart with ShowerTablet Select 400
Art. Nr.	24241140
Surface	Brushed Bronze

Installation examples

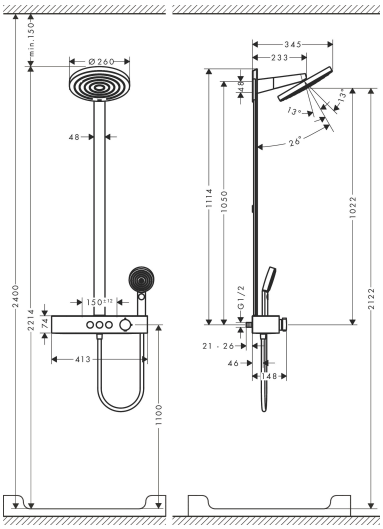

Dimensions may vary due to ceramic tolerances related to the production process.